YANMAR

PARTS CATALOG

0CR10-M57500EN

Last update Mar., 2011

PREFACE

1.This Parts Catalog carries all parts incorporated in YANMAR Model 2TNV70-NBK, 2TNV70-HGE engine manufactured since December, 2004.

2.Each illustration corresponds to the parts list on the following page.

3.When ordering parts,clearly write down the engine model and serial number,as well as the name and number of each part in your order sheet. This will help insure reliable delivery of the parts you have ordered.

Directions for the Parts Catalog.

1.The parts stipulated in this Parts Catalog are not necessarily standard equipped parts.
2.Parts may change without prior notice.
3.The following is an example of the Parts Catalog format.

0CF10-G21601 29. FUEL INJECTION PUMP(W/BOOST)

(A)=4JH-DT
(B)=4JH-DTZ
(C)=4JH-DTZP
(D)=4JH-DTZA
(E)=4JH-DTZY
(F)=

① REF.	② LEV.	PARTS NO.	DESCRIPTION	Q'TY (A)	(B)	(C)	(D)	(E)	(F)	③ I	⑤ R
1	1	729595-51390	FUEL INJECTION PUMP	1	1	1	1	1			1
1-1	1	729595-51391	FUEL INJECTION PUMP	1	1	1	1	1		N	1
	(A=E00185)	(B=E00200)									
3	2	26022-060162	SCREW M 6X 16	9	9	9	9	9			
3-1 ④	2	26022-060162	SCREW M 6X 16	4	4	4	4	4		K	
	(A=E00156)	(B=E00156)	(C=E00156) (D=E00156)	(E=E00156)							
4	2	129470-51040	CAMSHAFT	1	1	1	1	1			
5	2	122710-51050	BEARING, ROLLER	2	2	2	2	2			
6	2	129470-51060	RETAINER	1	1	1	1	1			

Remarks
(1) BOOST COMPEMSATOR TYPE. OPTIONAL
PART, TO E00155,(4JH-DT, 4JH-DTZ

① Ref. No.

The Ref. No. listed may not be in accordance with the illustration Ref. No.

(Ex.) Illustration No. 1 — List Ref No. 1 (Before change) → 1- 1 (After change)

For interchangeable symbols N, R and K, illustrations for new parts may be abbreviated.

② Lev. (Level)

Level indication
The numbers below indicate the level of relativity towards the main part.
1 ----- Main parts (Assembly parts)
2 ----- Sub component included in " 1 ".
3 ----- Sub component included in " 2 ".
Note) Parts that are not for sale are partially illustrated but not listed.

③ Interchangeability Mark

When a part change takes place, one of the following interchangeability symbols is indicated beside the part.

Symbol	Interchangeability	Contents note
N	Old ←Yes / No→ New	New Part is interchangeable for Old Part but Old Part is not interchangeable for New Part.
Q	Old ←No / Yes→ New	New Part is not interchangeable for Old Part but Old Part is interchangeable for New Part.
R	Old ←Yes / Yes→ New	New/ Old Parts are both interchangeable.
S	Old ←No / No→ New	New/ Old Parts are both not interchangeable.
W		Part discontinued.
Z		Part newly added.
F		Not interchangeable by a single part but interchangeable together with related parts.
K		Changes only for used parts quantities.

④ Effective Machine No.

When a part changes, the effective Machine No. will be indicated in the (A)-(F) column.

Product Symbol	Product No.	Product Symbol	Product No.
C	Clutch No. Compressor No.	F	Machine No. (Agricultural Equip.)
D	Drive No.	M	Machine No.
E	Engine No.	Note 1)	Date

Note 1) A date may follow the symbol. (Ex.) 1996.01
Note 2) " XXX " are for parts that could not be predicted or for engine models that could not be identified.
Note 3) (A=E00185) is the E (Engine Serial Number) for the column (A) model (in this case 4JH-DT) after the parts design change.

⑤ Remarks Mark

Figures or alphabets (symbols) are entered in the remarks column.
The comments (remarks) on parts that are indicated at the bottom of the illustration are the same symbols as those stated above.

Contents

0CR10-M57500

Fig. No.	Fig. Name
ENGINE SECTION 2TNV70-NBK,HGE	
1.	CYLINDER BLOCK
2.	GEAR HOUSING
3.	FLYWHEEL HOUSING & OIL SUMP
4.	CYLINDER HEAD & BONNET
5.	EXHAUST MANIFOLD
6.	CAMSHAFT & DRIVING GEAR
7.	CRANKSHAFT & PISTON
8.	LUB.OIL SYSTEM
9.	COOLING WATER SYSTEM
10.	FUEL INJECTION PUMP
11.	GOVERNOR
12.	FUEL INJECTION VALVE
13.	FUEL LINE
14.	STARTING MOTOR
15.	GENERATOR
16.	GASKET SET

Fig.1. CYLINDER BLOCK

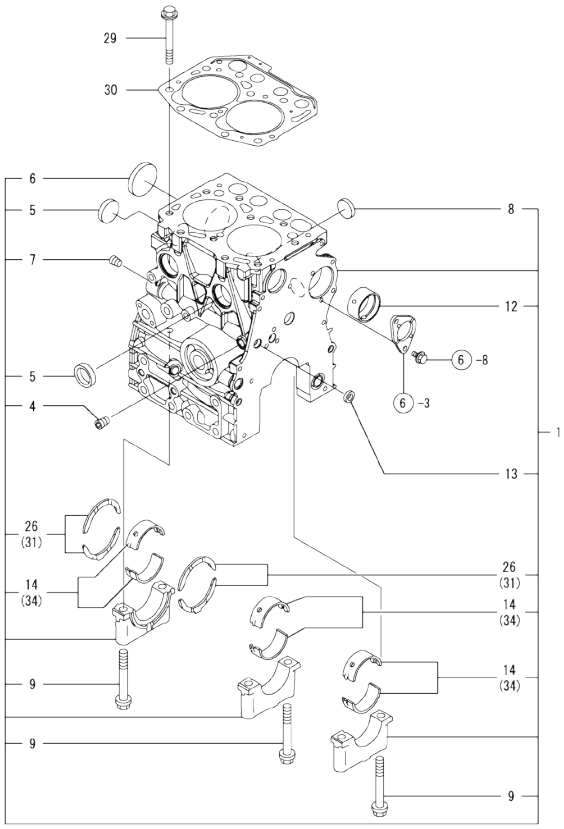

(A)=2TNV70-NBK
(B)=2TNV70-HGE
(C)=
(D)=
(E)=
(F)=

No.	Lev.	Parts No.	Description	Q'ty (A)	(B)	(C)	(D)	(E)	(F)	I	R
1	1	719415-01560	BLOCK ASSY, CYLINDER	1	1						
4	2	124060-01050	PLUG, PT1/8	1	1						
5	2	105311-01090	PLUG, 30	3	3						
6	2	119623-01250	PLUG, 45	1	1						
7	2	124160-01910	PLUG, PT1/4	1	1						
8	2	119285-01990	PLUG, 25	2	2						
9	2	119620-02020	BOLT, METAL CAP	6	6						
12	2	119717-02410	BUSH, CAMSHAFT	1	1						
13	2	27241-120000	PLUG, 12	1	1						
14	2	719717-02900	BEARING, MAIN	3	3						1
26	2	119717-02930	BEARING, THRUST	2	2						
29	1	119515-01200	BOLT, HEAD	10	10						
30	1	119415-01330	GASKET, HEAD	1	1						
31	1	119810-02940	BEARING, THRUST 0.25	2	2						2
34	1	719717-02910	BEARING, 0.25 US	3	3						3

Remarks
(1)REPAIR PART.
(2)OVER SIZED(O.S.=0.25)PART.
(3)UNDER SIZED(U.S.=0.25)PART.

N:Old ←Yes/No→ New. Q:Old ←No/Yes→ New. R:Old ←Yes/Yes→ New. S:Old ←No/No→ New. W:Add. Z:Discontinued. F:Interchangeable by set. K:Q'ty Change

Copyright (C) YANMAR GLOBAL CS CO., LTD. All RightsReserved.

Fig.2. GEAR HOUSING

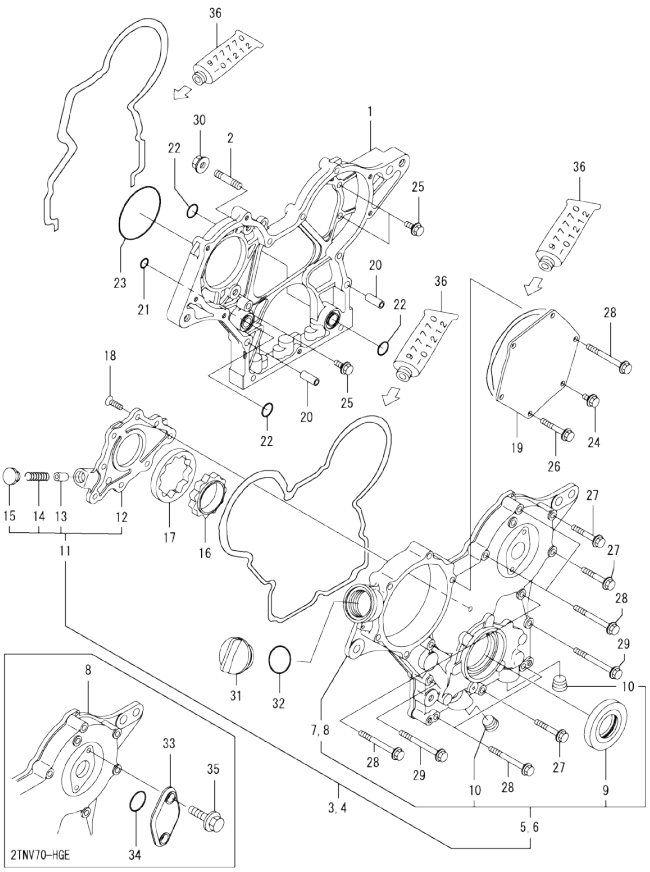

(A)=2TNV70-NBK
(B)=2TNV70-HGE
(C)=
(D)=
(E)=
(F)=

No.	Lev.	Parts No.	Description	Q'ty (A)	(B)	(C)	(D)	(E)	(F)	I	R
1	1	119717-01501	CASE, GEAR	1	1						
2	1	119717-01570	STUD	3	3						
3	1	119717-01590	COVER ASSY,GEAR CASE	1							
4	1	119744-01590	COVER ASSY,GEAR CASE		1						
5	2	719717-01500	COVER ASSY,GEAR CASE	1							
6	2	719744-01500	COVER ASSY,GEAR CASE		1						
7	3	119717-01521	COVER, GEAR CASE	1							
8	3	119744-01521	COVER, GEAR CASE		1						
9	3	119620-01800	SEAL, OIL	1	1						
10	3	23876-030000	PLUG, R03	2	2						
11	2	119717-32100	COVER ASSY	1	1						
12	3	119717-32080	COVER	1	1						
13	3	129900-32130	VALVE, RELIEF	1	1						
14	3	129001-32320	SPRING	1	1						
15	3	129001-32330	PLUG	1	1						
16	2	119717-32110	ROTOR, INNER	1	1						
17	2	119717-32120	ROTOR, OUTER	1	1						
18	2	119802-32130	SCREW, M6X16	8	8						
19	1	119717-01750	COVER	1	1						
20	1	119660-01911	PIPE, KNOCK	4	4						
21	1	119624-32040	O-RING, P12.0	1	1						
22	1	119717-32050	O-RING, P17.0	3	3						
23	1	121850-51960	O-RING	1	1						
24	1	26106-060122	BOLT, M6X 12 PLATED	1	1						
25	1	26106-060162	BOLT, M6X 16 PLATED	4	4						
26	1	26106-060402	BOLT, M6X 40 PLATED	4	4						
27	1	26106-060402	BOLT, M6X 40 PLATED	3	3						
28	1	26106-060602	BOLT, M6X 60 PLATED	7	7						
29	1	26106-060652	BOLT, M6X 65 PLATED	2	2						
30	1	26306-080002	NUT, M8	3	3						
31	1	124160-01751	COVER, FILLER	1	1						
32	1	24311-000320	O-RING, 1AP32.0	1	1						
33	1	121023-01550	COVER		1						
34	1	24341-000240	O-RING, 1AS24.0		1						
35	1	26106-060162	BOLT, M6X 16 PLATED		2						
36	1	977770-01212	GASKET, LIQUID	1	1						1

Remarks
(1) OPTIONAL PART.

N:Old ←Yes/No→ New. Q:Old ←No/Yes→ New. R:Old ←Yes/Yes→ New. S:Old ←No/No→ New. W:Add. Z:Discontinued. F:Interchangeable by set. K:Q'ty Change

Copyright (C) YANMAR GLOBAL CS CO., LTD. All RightsReserved.

Fig.3. FLYWHEEL HOUSING & OIL SUMP

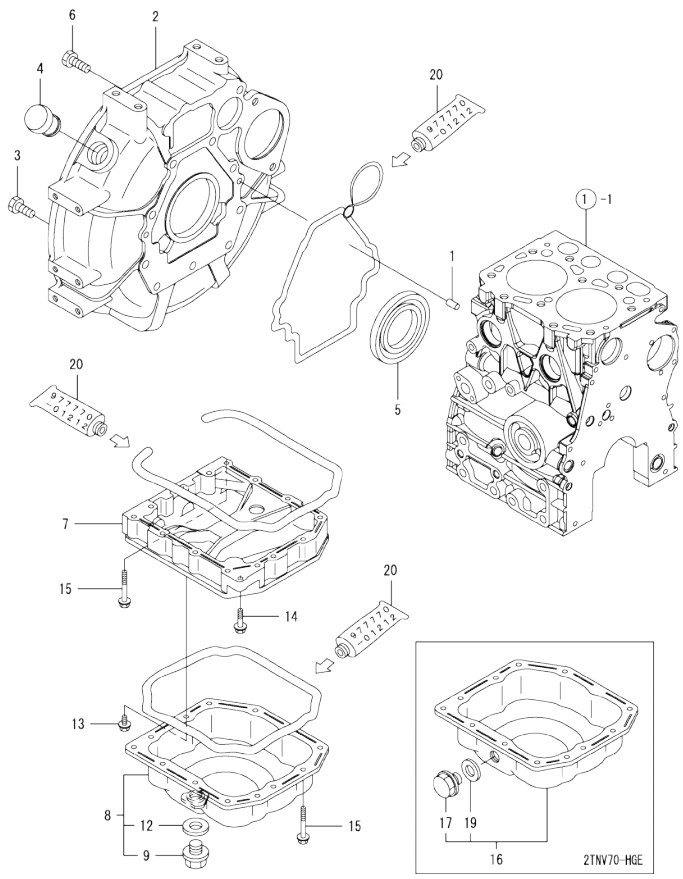

(A)=2TNV70-NBK
(B)=2TNV70-HGE
(C)=
(D)=
(E)=
(F)=

No.	Lev.	Parts No.	Description	Q'ty (A)	(B)	(C)	(D)	(E)	(F)	I	R
1	1	129100-01580	PIN, M8X16	2	2						
2	1	119515-01601	HOUSING, FLYWHEEL	1	1						
3	1	121120-01620	BOLT, M10X28	3	3						
4	1	119620-01750	CAP	1	1						
5	1	124085-02220	SEAL, OIL	1	1						
6	1	26206-100252	BOLT, M10X 25 PLATED	7	7						
7	1	119415-01720	SPACER, OIL SUMP	1	1						
8	1	119440-01770	SUMP ASSY, OIL	1							
9	2	105425-01690	PLUG, 16	1							
12	2	22190-160002	WASHER, SEAL 16	1							
13	1	26106-060122	BOLT, M6X 12 PLATED	1	1						
14	1	26106-060252	BOLT, M6X 25 PLATED	1	1						
15	1	26106-060452	BOLT, M6X 45 PLATED	13	13						
16	1	119446-01770	SUMP ASSY, OIL		1						
17	2	105425-01690	PLUG, 16		1						
19	2	22190-160002	WASHER, SEAL 16		1						
20	1	977770-01212	GASKET, LIQUID	1	1						1

Remarks
(1) OPTIONAL PART.

N:Old $\frac{\text{Yes}}{\text{No}}$ New. Q:Old $\frac{\text{No}}{\text{Yes}}$ New. R:Old $\frac{\text{Yes}}{\text{Yes}}$ New. S:Old $\frac{\text{No}}{\text{No}}$ New. W:Add. Z:Discontinued. F:Interchangeable by set. K:Q'ty Change

Copyright (C) YANMAR GLOBAL CS CO., LTD. All RightsReserved.

Fig.4. CYLINDER HEAD & BONNET

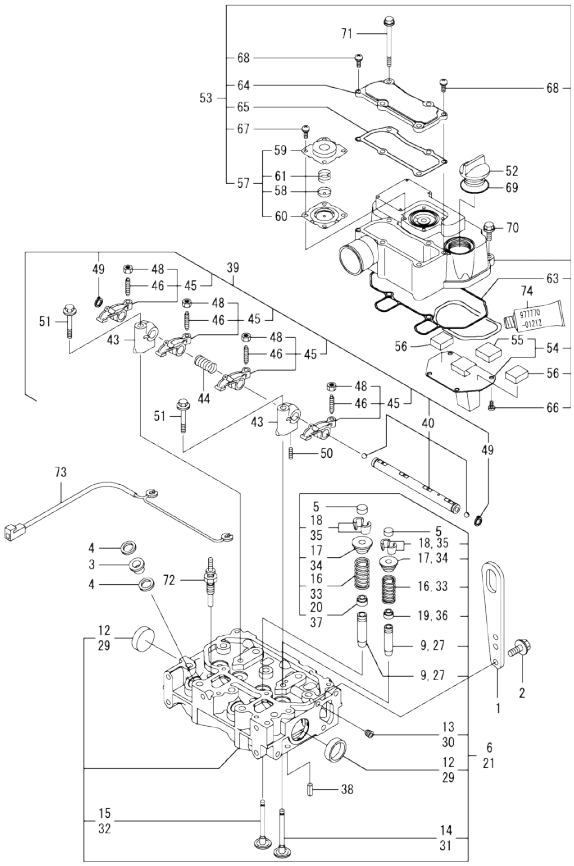

Remarks
(1) REPAIR PART.
(2) OPTIONAL PART.

(A)=2TNV70-NBK
(B)=2TNV70-HGE
(C)=
(D)=
(E)=
(F)=

No.	Lev.	Parts No.	Description	Q'ty (A)	(B)	(C)	(D)	(E)	(F)	I	R
1	1	129900-07900	LIFTER	1	1						
2	1	26106-080162	BOLT, M8X 16 PLATED	2	2						
3	1	129901-11450	PROTECTOR, NOZZLE	2	2						
4	1	119600-11460	GASKET, NOZZLE	4	4						
5	1	105010-11490	CAP, VALVE	4	4						
6	1	119415-11740	HEAD ASSY, CYLINDER	1							
9	2	119515-11800	GUIDE, VALVE	4							1
12	2	119285-11990	PLUG, 35	2							
13	2	23876-005000	PLUG, R005	1							
14	2	119515-11100	VALVE, INTAKE	2							
15	2	119515-11110	VALVE, EXHAUST	2							
16	2	119717-11131	SPRING, VALVE	4							
17	2	129508-11180	RETAINER, SPRING	4							
18	2	119717-11190	COTTER	8							
19	2	119717-11340	SEAL, VALVE STEM	2							
20	2	119717-11350	SEAL, VALVE STEM	2							
21	1	119415-11750	HEAD ASSY, CYLINDER		1						
27	2	119515-11800	GUIDE, VALVE		4						1
29	2	119285-11990	PLUG, 35		2						
30	2	23876-005000	PLUG, R005		1						
31	2	119515-11100	VALVE, INTAKE		2						
32	2	119515-11110	VALVE, EXHAUST		2						
33	2	119717-11131	SPRING, VALVE		4						
34	2	129508-11180	RETAINER, SPRING		4						
35	2	119717-11190	COTTER		8						
36	2	119717-11340	SEAL, VALVE STEM		2						
37	2	119717-11350	SEAL, VALVE STEM		2						
38	1	22351-060012	PIN, SPRING 6.0X12	2	2						
39	1	119415-11200	SUPPORT ASSY, ARM	1	1						
40	2	119415-11240	SHAFT ASSY, ROCKER	1	1						
43	2	119717-11260	SUPPORT, ROCKER ARM	2	2						
44	2	119515-11280	SPRING	1	1						
45	2	119717-11650	ARM, ROCKER	4	4						
46	3	129150-11230	SCREW, VALVE ADJUST	4	4						
48	3	129150-11750	NUT, M8	4	4						
49	2	22242-000120	RING, 12	2	2						
50	2	26979-050162	SCREW, M5X16	1	1						
51	1	26106-080402	BOLT, M8X 40 PLATED	2	2						
52	1	124160-01751	COVER, FILLER	1	1						
53	1	119415-11380	BONNET ASSY, HEAD	1	1						
54	2	119717-03031	PLATE	1	1						
55	3	119717-03070	BAFFLE, BREATHER	1	1						
56	2	119717-03070	BAFFLE, BREATHER	2	2						
57	2	119802-03100	DIAPHRAGM ASSY	1	1						
58	3	119802-03110	PLATE	1	1						
59	3	119802-03121	COVER, DIAPHRAGM	1	1						
60	3	119802-03131	DIAPHRAGM	1	1						
61	3	119802-03141	SPRING, DIAPHRAGM	1	1						
63	2	119415-11310	GASKET, BONNET	1	1						
64	2	119415-11320	COVER, BONNET	1	1						
65	2	119415-11330	GASKET	1	1						

N:Old ◄Yes/No► New. Q:Old ◄No/Yes► New. R:Old ◄Yes/Yes► New. S:Old ◄No/No► New. W:Add. Z:Discontinued. F:Interchangeable by set. K:Q'ty Change

++ CONTINUE ++

Copyright (C) YANMAR GLOBAL CS CO., LTD. All RightsReserved.

Fig.4. CYLINDER HEAD & BONNET

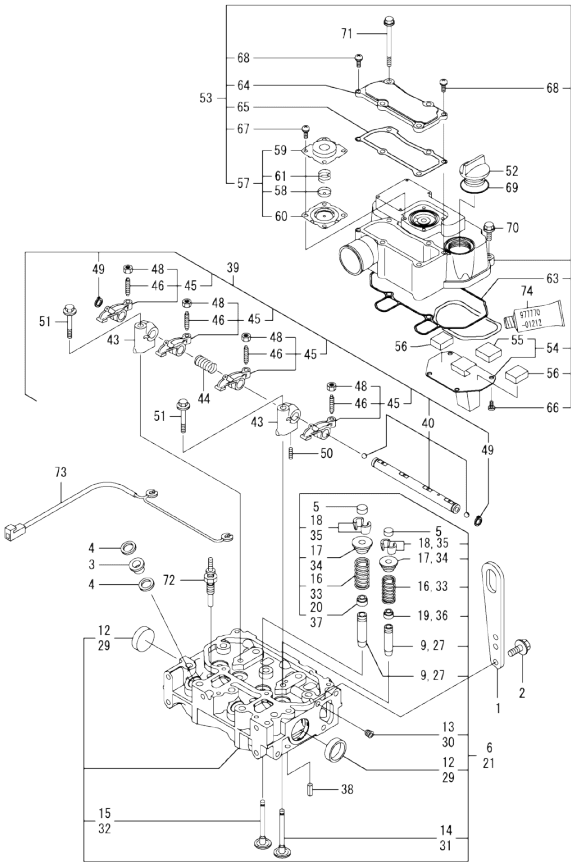

Remarks
(1) REPAIR PART.
(2) OPTIONAL PART.

(A)=2TNV70-NBK
(B)=2TNV70-HGE
(C)=
(D)=
(E)=
(F)=

No.	Lev.	Parts No.	Description	Q'ty (A)	(B)	(C)	(D)	(E)	(F)	I	R
66	2	22857-500100	SCREW, 5X10	4	4						
67	2	22857-500100	SCREW, 5X10	4	4						
68	2	22857-500160	SCREW, 5X16	2	2						
69	1	24311-000320	O-RING, 1AP32.0	1	1						
70	1	26106-060202	BOLT, M6X 20 PLATED	2	2						
71	1	26106-060752	BOLT, M6X 75 PLATED	4	4						
72	1	119717-77800	PLUG, GLOW	2	2						
73	1	119415-77820	CONNECTOR, GLOW PLUG	1	1						
74	1	977770-01212	GASKET, LIQUID	1	1						2

N:Old $\frac{\text{Yes}}{\text{No}}$ New. Q:Old $\frac{\text{No}}{\text{Yes}}$ New. R:Old $\frac{\text{Yes}}{\text{Yes}}$ New. S:Old $\frac{\text{No}}{\text{No}}$ New. W:Add. Z:Discontinued. F:Interchangeable by set. K:Q'ty Change

Copyright (C) YANMAR GLOBAL CS CO., LTD. All RightsReserved.

Fig.5. EXHAUST MANIFOLD

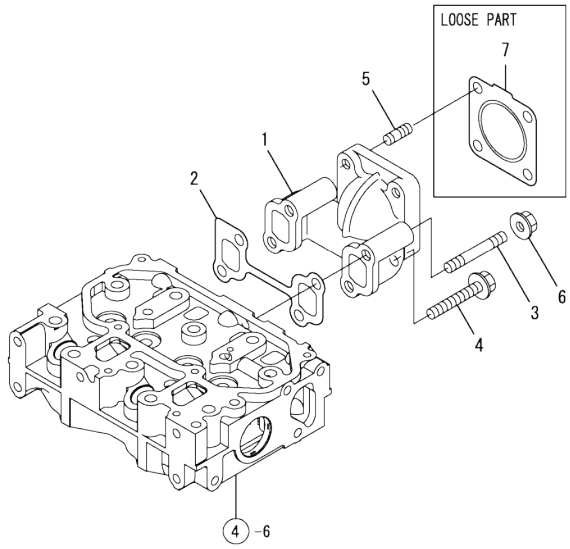

(A)=2TNV70-NBK
(B)=2TNV70-HGE
(C)=
(D)=
(E)=
(F)=

No.	Lev.	Parts No.	Description	Q'ty (A)	(B)	(C)	(D)	(E)	(F)	I	R
1	1	119415-13100	MANIFOLD, EXHAUST	1	1						
2	1	119415-13110	GASKET	1	1						
3	1	119717-13600	STUD, M8X50	2	2						
4	1	119802-13620	BOLT, M8X50	2	2						
5	1	119131-18320	STUD, M8X22	4	4						
6	1	26306-080002	NUT, M8	2	2						
7	1	119515-13200	GASKET, SILENCER	1	1						

N:Old ←Yes/No→ New. Q:Old ←No/Yes→ New. R:Old ←Yes/Yes→ New. S:Old ←No/No→ New. W:Add. Z:Discontinued. F:Interchangeable by set. K:Q'ty Change

Copyright (C) YANMAR GLOBAL CS CO., LTD. All RightsReserved.

Fig.6. CAMSHAFT & DRIVING GEAR

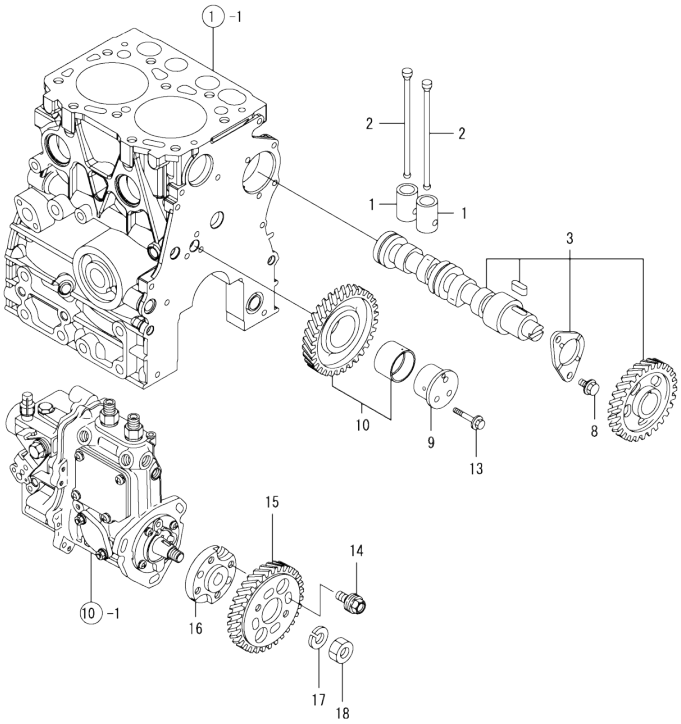

(A)=2TNV70-NBK
(B)=2TNV70-HGE
(C)=
(D)=
(E)=
(F)=

No.	Lev.	Parts No.	Description	Q'ty (A)	(B)	(C)	(D)	(E)	(F)	I	R
1	1	119620-14200	TAPPET	4	4						
2	1	119515-14400	ROD, PUSH	4	4						
3	1	119415-14580	CAMSHAFT ASSY	1	1						
8	1	26106-060122	BOLT, M6X 12 PLATED	2	2						
9	1	119717-25050	SHAFT, IDLE	1	1						
10	1	119717-25100	GEAR ASSY, IDLE	1	1						
13	1	26106-060352	BOLT, M6X 35 PLATED	3	3						
14	1	129150-25301	BOLT	4	4						
15	1	119717-25930	GEAR, PUMP	1	1						
16	1	119717-51150	FLANGE	1	1						
17	1	22217-120000	WASHER, SPRING 12	1	1						
18	1	26716-120002	NUT, M12	1	1						

N:Old ◄Yes/No► New. Q:Old ◄No/Yes► New. R:Old ◄Yes/Yes► New. S:Old ◄No/No► New. W:Add. Z:Discontinued. F:Interchangeable by set. K:Q'ty Change

Copyright (C) YANMAR GLOBAL CS CO., LTD. All RightsReserved.

Fig.7. CRANKSHAFT & PISTON

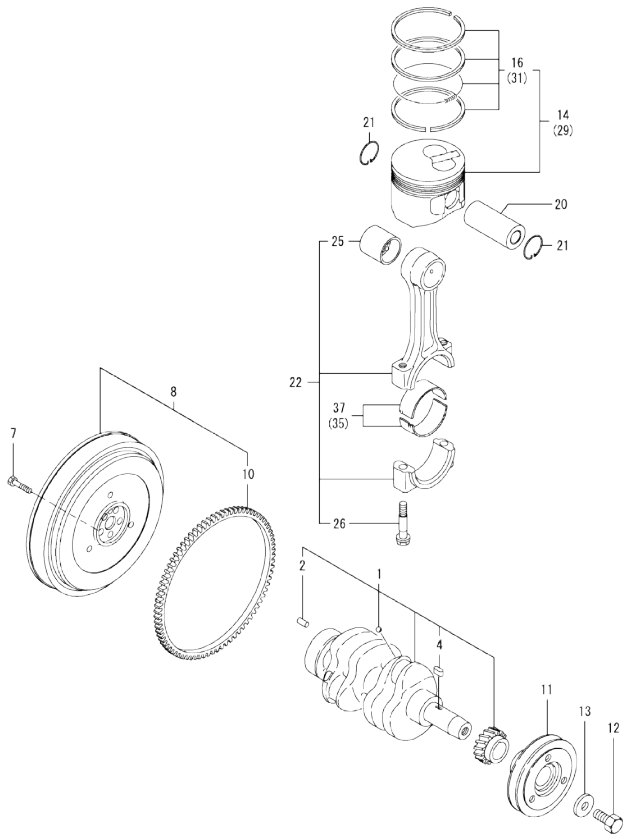

(A)=2TNV70-NBK
(B)=2TNV70-HGE
(C)=
(D)=
(E)=
(F)=

No.	Lev.	Parts No.	Description	Q'ty (A)	(B)	(C)	(D)	(E)	(F)	I	R
1	1	119415-21700	CRANKSHAFT ASSY	1	1						
2	2	129100-01580	PIN, M8X16	1	1						
4	2	22512-040120	KEY, 4X 12	1	1						
7	1	119620-21500	BOLT, FLYWHEEL	5	5						
8	1	119415-21580	FLYWHEEL ASSY	1	1						
10	2	124950-21600	GEAR, RING	1	1						
11	1	119717-21650	V-PULLEY	1	1						
12	1	119621-21680	BOLT, FLANGE 12X1.25	1	1						
13	1	119620-21941	WASHER	1	1						
14	1	119515-22080	PISTON ASSY	2	2						
16	2	119515-22500	RING SET, PISTON	2	2						
20	1	119515-22300	PIN, PISTON	2	2						
21	1	22252-000220	RING, 22	4	4						
22	1	119515-23000	ROD ASSY, CONNECTING	2	2						
25	2	119717-23910	BEARING, PISTON PIN	2	2						1
26	2	119717-23200	BOLT, CONNECTING ROD	4	4						
29	1	119515-22900	PISTON ASSY, 0.25 OS	2	2						2
31	2	119515-22550	RING SET, 0.25 OS	2	2						2
35	1	119515-23610	METAL ASSY, 0.25	2	2						3
37	1	119515-23600	BEARING, CRANK PIN	2	2						

Remarks
(1) REPAIR PART.
(2) OVER-SIZED(O.S.=0.25)PART.
(3) UNDER-SIZED(U.S.=0.25)PART.

N:Old $\frac{\text{Yes}}{\text{No}}$ New. Q:Old $\frac{\text{No}}{\text{Yes}}$ New. R:Old $\frac{\text{Yes}}{\text{Yes}}$ New. S:Old $\frac{\text{No}}{\text{No}}$ New. W:Add. Z:Discontinued. F:Interchangeable by set. K:Q'ty Change

Copyright (C) YANMAR GLOBAL CS CO., LTD. All RightsReserved.

Fig.8. LUB.OIL SYSTEM

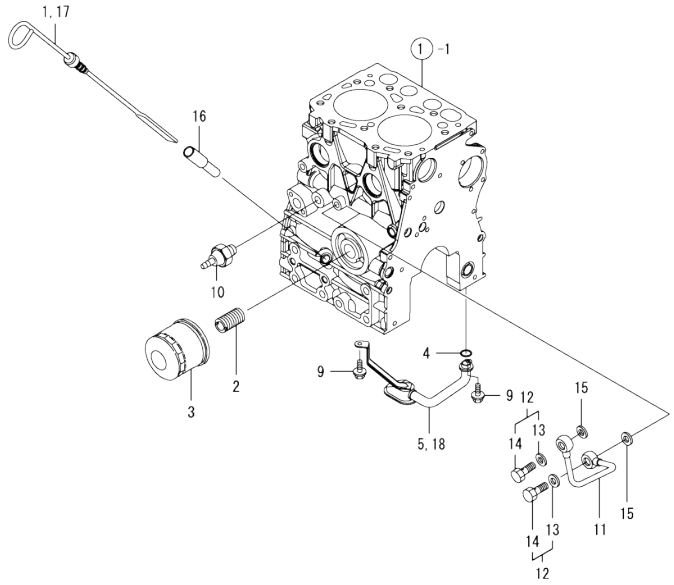

(A)=2TNV70-NBK
(B)=2TNV70-HGE
(C)=
(D)=
(E)=
(F)=

No.	Lev.	Parts No.	Description	Q'ty (A)	(B)	(C)	(D)	(E)	(F)	I	R
1	1	119415-34801	DIPSTICK, OIL	1							
2	1	129100-35140	STUD	1	1						
3	1	119305-35170	FILTER ASSY, D68XL65	1	1						1
4	1	119717-32060	O-RING, P15.0	1	1						
5	1	119415-35080	PIPE ASSY, OIL INLET	1							
9	1	26106-060102	BOLT, M6X 10 PLATED	2	2						
10	1	114250-39450	SWITCH, 0.5KG	1	1						
11	1	119415-39210	PIPE, OIL	1	1						
12	1	129005-59830	BOLT ASSY, JOINT M8	2	2						
13	2	22190-080002	WASHER, SEAL 6	2	2						
14	2	23857-030000	BOLT, JOINT 3	2	2						
15	1	22190-080002	WASHER, SEAL 6	2	2						
16	1	121520-34810	GUIDE, DIPSTICK	1	1						
17	1	119446-34801	DIPSTICK, OIL		1						
18	1	119446-35080	PIPE ASSY, OIL INLET		1						

Remarks
(1) REPAIR PART.

N:Old ←Yes/No→ New. Q:Old ←No/Yes→ New. R:Old ←Yes/Yes→ New. S:Old ←No/No→ New. W:Add. Z:Discontinued. F:Interchangeable by set. K:Q'ty Change

Copyright (C) YANMAR GLOBAL CS CO., LTD. All RightsReserved.

Fig.9. COOLING WATER SYSTEM

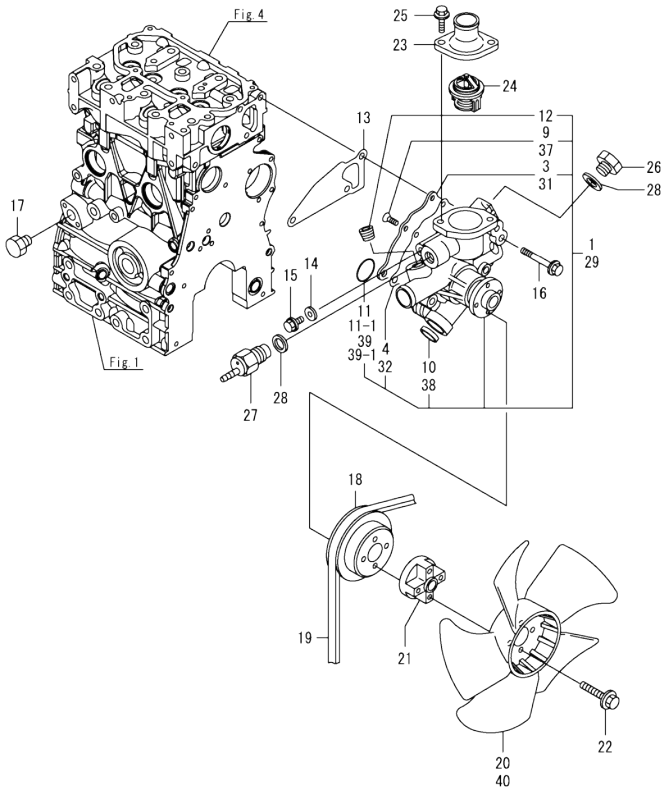

(A)=2TNV70-NBK
(B)=2TNV70-HGE
(C)=
(D)=
(E)=
(F)=

No.	Lev.	Parts No.	Description	Q'ty (A)	(B)	(C)	(D)	(E)	(F)	I	R
1	1	119540-42000	PUMP ASSY, WATER	1							
1-1	1	119C10-42000	PUMP ASSY, WATER	1						N	
	(A=ED9223)										
1-2	1	119C10-42001	PUMP ASSY, CW	1						N	
	(A=EE9025)										
3	2	119515-42041	COVER, WATER PUMP	1							
4	2	119717-42031	GASKET, WATER PUMP	1							
9	2	26577-060122	SCREW, M6X12	4							
10	2	27241-250000	PLUG, 25	1							
10-1	2	119717-42050	PLUG, 25	1						N	
	(A=EE9025)										
11	2	119717-42320	O-RING, P26	1							
11-1	2	119C10-42320	O-RING, 2028	1						S	
	(A=ED9223)										
12	2	129916-49740	PLUG, R3/8	1							
13	1	119515-42020	GASKET, WATER PUMP	1	1						
14	1	23414-080000	GASKET, 8X1.0	1	1						
15	1	26106-080122	BOLT, M8X 12 PLATED	1	1						
16	1	26106-080502	BOLT, M8X 50 PLATED	3	3						
17	1	171056-49120	PLUG, DRAIN R1/4	1	1						
18	1	119515-42350	V-PULLEY, PUMP D110	1	1						
19	1	171001-42290	V-BELT, A35.5	1	1						
20	1	124450-44740	FAN, COOLING D=290	1	1						
21	1	121267-44760	SPACER, FAN 18MM	1	1						
22	1	26106-060302	BOLT, M6X 30 PLATED	4	4						
23	1	129350-49530	COVER, THERMOSTAT	1	1						
24	1	119717-49800	THERMOSTAT, 71C	1	1						
25	1	26106-080202	BOLT, M8X 20 PLATED	2	2						
26	1	121450-42450	PLUG, M16	1	1						
27	1	121250-44901	SWITCH, TEMPERATURE	1	1						
28	1	124465-44950	GASKET, 16	2	2						
29	1	119515-42001	PUMP ASSY, WATER		1						
29-1	1	119515-42002	PUMP ASSY, WATER		1					N	
		(B=ED9432)									
31	2	119515-42041	COVER, WATER PUMP		1						
32	2	119717-42031	GASKET, WATER PUMP		1						
37	2	26577-060122	SCREW, M6X12		4						
38	2	27241-250000	PLUG, 25		1						
39	2	119717-42320	O-RING, P26		1						
39-1	2	119C10-42320	O-RING, 2028		1					S	
		(B=ED9432)									
40	1	119415-44740	FAN, COOLING D=260VC		1						

N:Old ←Yes/No→ New. Q:Old ←No/Yes→ New. R:Old ←Yes/Yes→ New. S:Old ←No/No→ New. W:Add. Z:Discontinued. F:Interchangeable by set. K:Q'ty Change

Copyright (C) YANMAR GLOBAL CS CO., LTD. All RightsReserved.

Fig.10. FUEL INJECTION PUMP

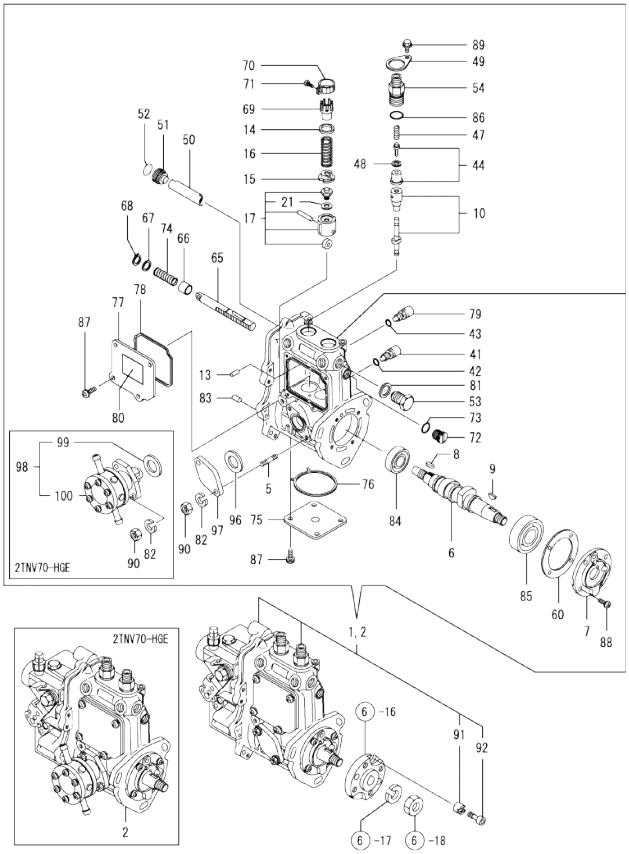

(A)=2TNV70-NBK
(B)=2TNV70-HGE
(C)=
(D)=
(E)=
(F)=

No.	Lev.	Parts No.	Description	Q'ty (A)	(B)	(C)	(D)	(E)	(F)	I	R
1	1	719440-51350	PUMP ASSY, INJECTION	1							1
2	1	719446-51350	PUMP ASSY, INJECTION		1						1
5	2	129155-51020	STUD	2	2						
6	2	119415-51030	CAMSHAFT	1	1						
7	2	119717-51060	SUPPORT, CAMSHAFT	1	1						
8	2	119717-51070	KEY	1	1						
9	2	122710-51090	KEY	1	1						
10	2	119515-51100	PLUNGER ASSY	2	2						
13	2	129155-51140	PIN	2	2						
14	2	158600-51170	RETAINER, SPRING	2	2						
15	2	119717-51180	RETAINER, SPRING	2	2						
16	2	119717-51190	SPRING, PLUNGER	2	2						
17	2	119717-51200	TAPPET ASSY	2	2						
21	3	129155-51600	SHIM SET, ADJUSTING	1	1						
41	2	158600-51270	STOPPER, TAPPET	2	2						
42	2	129155-51280	O-RING, S6	2	2						
43	2	129155-51280	O-RING, S6	1	1						
44	2	119717-51300	VALVE ASSY, DELIVERY	2	2						
47	2	119717-51330	SPRING, DELIVERY	2	2						
48	2	124550-51350	GASKET, DELIVERY	2	2						
49	2	118400-51370	LOCKING	2	2						
50	2	119415-51400	PROTECTOR	1	1						
51	2	158600-51410	PLUG, DEFLECTOR	1	1						
52	2	119717-51420	O-RING	1	1						
53	2	158600-51420	PLUG, DEFLECTOR	1	1						
54	2	158600-51441	VALVE ASSY, DELIVERY	2	2						
60	2	129155-51450	SHIM SET, ADJUSTING	1	1						
65	2	119415-51500	RACK, CONTROL	1	1						
66	2	129155-51521	BUSH, RACK	1	1						
67	2	129155-51530	SPACER	1	1						
68	2	129155-51540	CIRCLIP	1	1						
69	2	129155-51550	PINION, CONTROL	2	2						
70	2	129100-51560	PINION	2	2						
71	2	129100-51570	SCREW	2	2						
72	2	158600-51570	PLUG	1	1						
73	2	129155-51580	O-RING	1	1						
74	2	129155-51591	SPRING, RACK	1	1						
75	2	119415-51700	COVER	1	1						
76	2	119415-51710	GASKET	1	1						
77	2	119415-51750	COVER	1	1						
78	2	119415-51760	GASKET	1	1						
79	2	158600-51790	STOOPER, RACK	1	1						
80	2	129156-51910	LABEL, CAUTION	1	1						
81	2	22190-160002	WASHER, SEAL 16	1	1						
82	2	22217-060000	WASHER, SPRING 6	2	2						
83	2	22351-050010	PIN, SPRING 5.0X10	2	2						
84	2	24101-060034	BEARING, BALL 6003	1	1						
85	2	24101-063034	BEARING, BALL 6303	1	1						
86	2	24316-000150	O-RING, 4DP15.0	2	2						
87	2	26022-050122	SCREW, M5X12	8	8						
88	2	26022-060162	SCREW, M6X16	4	4						

Remarks
(1) GOVERNOR ASSY(FIG.11) IS INCORPORATED IN THIS FOP.CMP (REF.NO.1,2).

N:Old ←Yes/No→ New. Q:Old ←No/Yes→ New. R:Old ←Yes/Yes→ New. S:Old ←No/No→ New. W:Add. Z:Discontinued. F:Interchangeable by set. K:Q'ty Change

++ CONTINUE ++

Copyright (C) YANMAR GLOBAL CS CO., LTD. All RightsReserved.

Fig.10. FUEL INJECTION PUMP

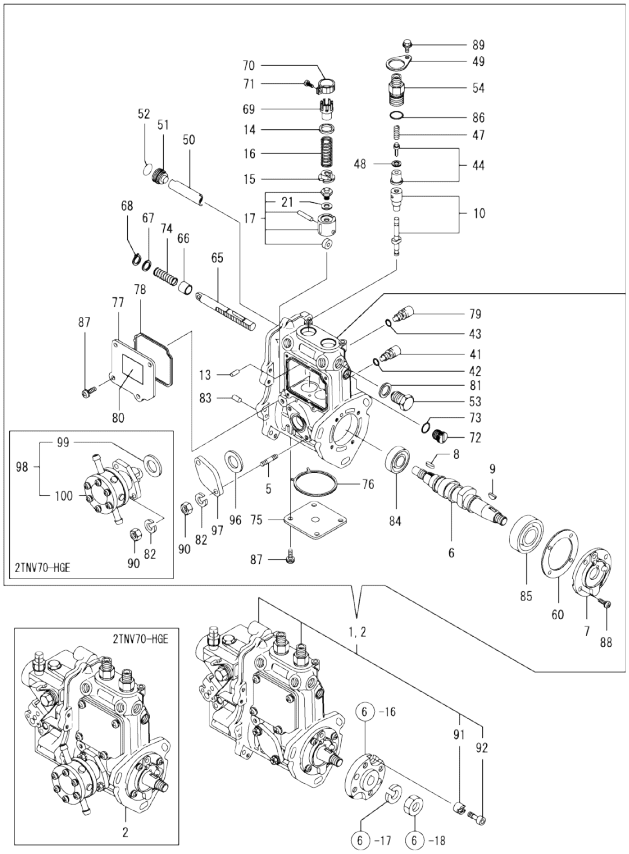

Remarks
(1) GOVERNOR ASSY(FIG.11) IS INCORPORATED IN THIS FOP.CMP (REF.NO.1,2).

(A)=2TNV70-NBK
(B)=2TNV70-HGE
(C)=
(D)=
(E)=
(F)=

No.	Lev.	Parts No.	Description	Q'ty (A)	(B)	(C)	(D)	(E)	(F)	I	R
89	2	26106-050102	BOLT, M5X 10 PLATED	2	2						
90	2	26716-060002	NUT, M6	2	2						
91	2	119717-51480	COLLAR	1	1						
92	2	119717-51490	BOLT	1	1						
96	2	129155-52051	GASKET	1							
97	2	129100-52200	COVER	1							
98	2	129100-52000	PUMP ASSY, FUEL FEED		1						
99	3	129155-52051	GASKET		1						
100	3	129100-52101	PUMP ASSY, FUEL FEED		1						

N:Old ←Yes/No→ New. Q:Old ←No/Yes→ New. R:Old ←Yes/Yes→ New. S:Old ←No/No→ New. W:Add. Z:Discontinued. F:Interchangeable by set. K:Q'ty Change

Copyright (C) YANMAR GLOBAL CS CO., LTD. All RightsReserved.

Fig.11. GOVERNOR

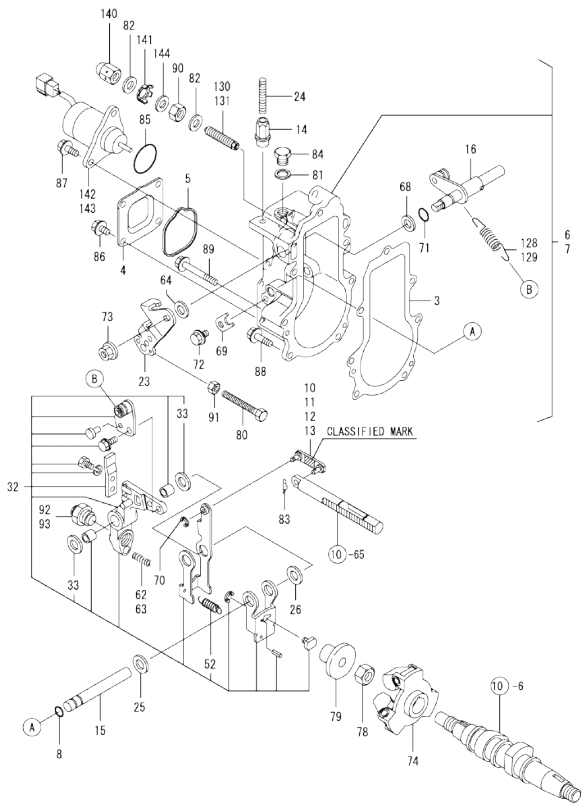

Remarks
(1) SELECTIVE PARTS;CERTAIN THE CLASSIFICATION MARK,THEN PLACE YOUR ORDER.(REF.TO.ILLUSTRATION).
* THIS FIGURE(GOVERNOR ASSY)IS INCORPORATED IN THE FUEL INJECTION PUMP ASSY(FIG.10).

(A)=2TNV70-NBK (D)=
(B)=2TNV70-HGE (E)=
(C)= (F)=

No.	Lev.	Parts No.	Description	Q'ty (A)	(B)	(C)	(D)	(E)	(F)	I	R
3	2	119717-61050	GASKET	1	1						
4	2	119717-61060	COVER, GOVERNOR CASE	1	1						
5	2	119717-61070	GASKET	1	1						
6	2	119717-61100	CASE ASSY, GOVERNOR	1							
7	2	119515-61100	CASE ASSY, GOVERNOR		1						
8	3	129155-51280	O-RING, S6	1	1						
10	3	119717-61120	LINK, MARK :3	1	1						1
11	3	119717-61130	LINK, MARK 98	1	1						1
12	3	119717-61140	LINK, MARK 88	1	1						1
13	3	119717-61150	LINK, MARK 03	1	1						1
14	3	129209-61370	NUT, M6	1	1						
15	3	129052-61390	SHAFT	1	1						
16	3	119717-61400	SHAFT ASSY	1	1						
23	3	119515-61440	LEVER, CONTROL	1	1						
24	3	129155-61450	BOLT, LIMITER	1	1						
25	3	129156-61460	SHIM, T=0.6	1	1						
26	3	129155-61480	SPACER ASSY	1	1						
32	3	119717-61500	LEVER ASSY, GOVERNOR	1	1						
33	4	174307-51700	SHIM SET	2	2						
52	4	129486-61540	SPRING, SET	1	1						
62	3	129100-61650	SPRING, CONTROLLER	1							
63	3	129486-61650	SPRING, STARTING		1						
64	3	158552-61700	SHIM SET	1	1						
68	3	158552-61710	SHIM, T=1.0	1	1						
69	3	119660-61901	RETAINER, SHAFT	1	1						
70	3	22272-000030	RING, E- 3	1	1						
71	3	24341-000070	O-RING, 1AS7.0	1	1						
72	3	26106-060102	BOLT, M6X 10 PLATED	1	1						
73	3	26366-080002	NUT, M8	1	1						
74	2	119717-61200	WEIGHT ASSY,GOVERNOR	1	1						
78	2	119660-61300	NUT	1	1						
79	2	129155-61341	SLEEVE	1	1						
80	2	129155-61460	BOLT, IDLE	1	1						
81	2	22190-100002	WASHER, SEAL 10	1	1						
82	2	22190-120002	WASHER, SEAL 12	2	2						
83	2	22372-040000	PIN, SNAP 4	1	1						
84	3	23887-100002	PLUG, 10	1	1						
85	2	24341-000280	O-RING, 1AS28.0	1	1						
85-1	2	158552-61900	O-RING	1	1						N
	(A=EXXXXX)	(B=EXXXXX)									
86	2	26106-060102	BOLT, M6X 10 PLATED	4	4						
87	2	26106-060142	BOLT, M6X 14 PLATED	2	2						
88	2	26106-060202	BOLT, M6X 20 PLATED	4	4						
89	2	26106-060452	BOLT, M6X 45 PLATED	3	3						
90	2	26736-120002	NUT, M12	1	1						
91	2	26756-060002	NUT, LOCK M6	1	1						
92	2	119740-61560	ANGLEICH ASSY	1							
93	2	119761-61560	ANGLEICH ASSY		1						
128	2	119718-61700	SPRING, GOVERNOR	1							
129	2	129100-61730	SPRING, GOVERNOR		1						
130	2	158601-61710	LIMITER ASSY, FUEL	1							

N:Old ←Yes/No→ New. Q:Old ←No/Yes→ New. R:Old ←Yes/Yes→ New. S:Old ←No/No→ New. W:Add. Z:Discontinued. F:Interchangeable by set. K:Q'ty Change

++ CONTINUE ++

Copyright (C) YANMAR GLOBAL CS CO., LTD. All RightsReserved.

Fig.11. GOVERNOR

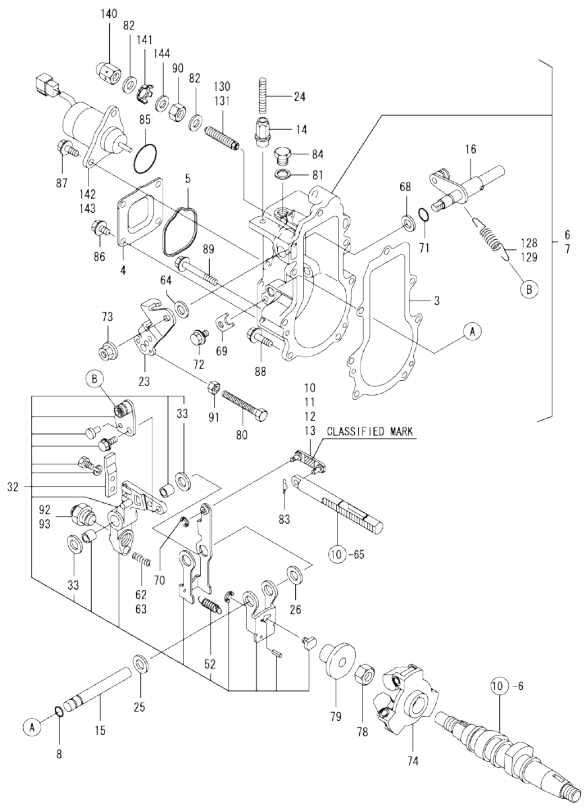

Remarks
(1) SELECTIVE PARTS;CERTAIN THE CLASSIFICATION MARK,THEN PLACE YOUR ORDER.(REF.TO.ILLUSTRATION).
* THIS FIGURE(GOVERNOR ASSY)IS INCORPORATED IN THE FUEL INJECTION PUMP ASSY(FIG.10).

(A)=2TNV70-NBK
(B)=2TNV70-HGE
(C)=
(D)=
(E)=
(F)=

No.	Lev.	Parts No.	Description	Q'ty (A)	(B)	(C)	(D)	(E)	(F)	I	R
131	2	158601-61700	LIMITER ASSY, FUEL		1						
140	2	129209-61930	NUT, CAP	1	1						
141	2	129209-61970	PLATE	1	1						
142	2	119233-77932	SOLENOID, STOP	1							
143	2	119653-77950	SOLENOID, STOP		1						
144	2	23414-120016	GASKET, 12X1.0	1	1						

N:Old ←Yes/No→ New. Q:Old ←No/Yes→ New. R:Old ←Yes/Yes→ New. S:Old ←No/No→ New. W:Add. Z:Discontinued. F:Interchangeable by set. K:Q'ty Change

Copyright (C) YANMAR GLOBAL CS CO., LTD. All RightsReserved.

Fig.12. FUEL INJECTION VALVE

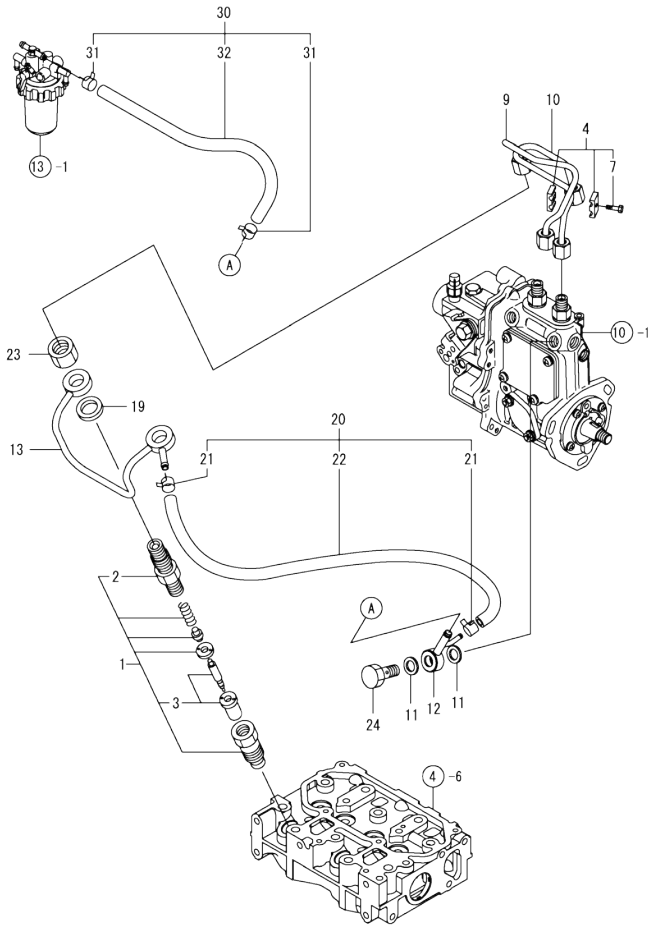

(A)=2TNV70-NBK (D)=
(B)=2TNV70-HGE (E)=
(C)= (F)=

No.	Lev.	Parts No.	Description	Q'ty (A)	(B)	(C)	(D)	(E)	(F)	I	R
1	1	119515-53001	VALVE ASSY,INJECTION	2	2						
2	2	118200-53010	HOLDER, NOZZLE	2	2						
3	2	119515-53010	VALVE ASSY,INJECTION	2	2						
4	1	119305-59120	RETAINER, PIPE	1	1						
7	2	129150-59131	BOLT, M4X14	1	1						
9	1	119415-59810	PIPE, INJECTION NO.1	1	1						
10	1	119415-59820	PIPE, INJECTION NO.2	1	1						
11	1	22190-120002	WASHER, SEAL 12	2	2						
12	1	119840-59570	JOINT, OVERFLOW	1	1						
13	1	119415-59540	PIPE ASSY, RETURN	1	1						
19	1	129901-59560	GASKET, FUEL RETURN	2	2						
20	1	119515-59570	HOSE ASSY, RETURN	1	1						
20-1	1	119540-59570	HOSE ASSY, RETURN	1	1					N	
	(A=E09793)	(B=E00246)									
21	2	124066-59100	CLAMP, HOSE 8	2	2						
22	2	105225-59240	HOSE, FUEL RETURN	1	1						
22-1	2	119540-59560	HOSE ASSY, RETURN	1	1					N	
	(A=E09793)	(B=E00246)									
23	1	119620-59700	NUT, NOZZLE RETURN	2	2						
24	1	119813-59950	VALVE ASSY, CHECK	1	1						
30	1	129210-59130	HOSE ASSY, FUEL L350	1	1						
31	2	124766-59050	CLAMP, HOSE 11.5	2	2						
32	2	105025-59750	HOSE, FUEL	1	1						

N:Old ←Yes/No→ New. Q:Old ←No/Yes→ New. R:Old ←Yes/Yes→ New. S:Old ←No/No→ New. W:Add. Z:Discontinued. F:Interchangeable by set. K:Q'ty Change

Copyright (C) YANMAR GLOBAL CS CO., LTD. All RightsReserved.

Fig.13. FUEL LINE

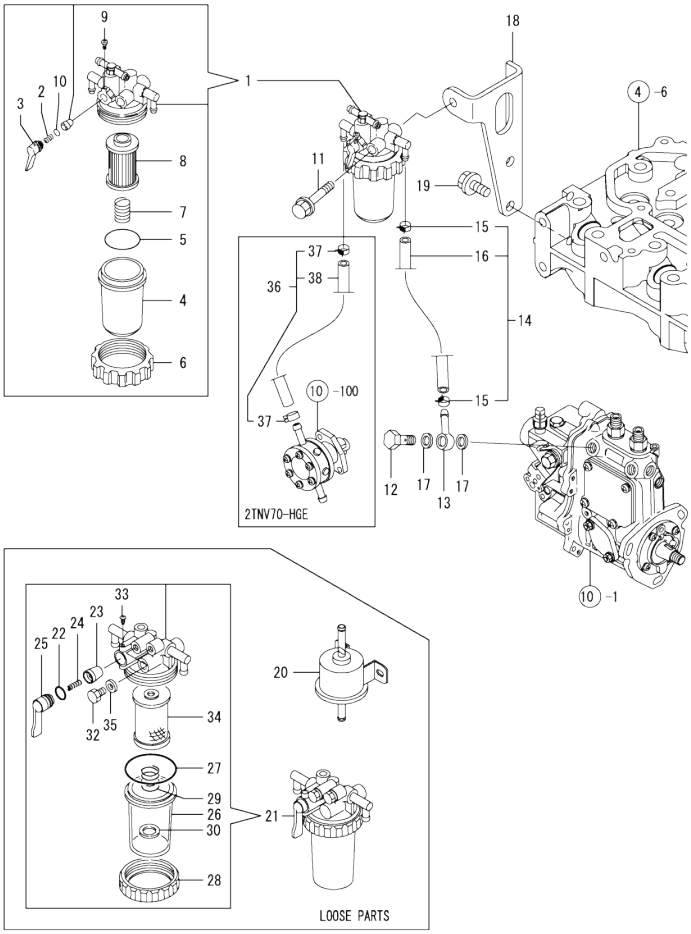

(A)=2TNV70-NBK
(B)=2TNV70-HGE
(C)=
(D)=
(E)=
(F)=

No.	Lev.	Parts No.	Description	Q'ty (A)	(B)	(C)	(D)	(E)	(F)	I	R
1	1	119833-55620	FILTER ASSY, FUEL	1	1						
2	2	104200-55330	SPRING, VALVE	1	1						
3	2	119810-55340	LEVER	1	1						
4	2	121254-55510	COVER	1	1						
5	2	102103-55520	O-RING	1	1						
6	2	110250-55610	RING, RETAINING	1	1						
7	2	121250-55620	SPRING	1	1						
8	2	119810-55650	ELEMENT	1	1						
9	2	104200-55750	SCREW, M4	1	1						
10	2	24311-240100	O-RING, 1AP10A	1	1						
11	1	26014-080702	BOLT, M8X 70	1	1						
12	1	103854-39140	BOLT, PIPE JOINT	1	1						
13	1	101304-59020	JOINT, PIPE 12	1	1						
14	1	129210-59050	PIPE ASSY, FUEL	1	1						
15	2	124766-59050	CLIP, HOSE 12	2	2						
16	2	105312-59510	PIPE, FUEL	1	1						
17	1	22190-120002	WASHER, SEAL 12	2	2						
18	1	119717-55650	BRACKET, FILTER	1	1						
19	1	26106-080142	BOLT, M8X 14 PLATED	2	2						
20	1	119225-52102	PUMP ASSY, FUEL FEED	1							
21	1	129335-55700	SEPARATOR ASSY,WATER	1	1						
22	2	24311-240100	O-RING, 1AP10A	1	1						
23	2	104200-55321	VALVE, TAPER	1	1						
24	2	104200-55330	SPRING, VALVE	1	1						
25	2	104200-55341	HANDLE	1	1						
26	2	124064-55510	COVER	1	1						
27	2	102103-55520	O-RING	1	1						
28	2	110250-55610	RING, RETAINING	1	1						
29	2	121257-55720	SPRING	1	1						
30	2	121257-55731	FLOAT	1	1						
32	2	101720-55750	PLUG, 6	2	2						
33	2	104200-55750	SCREW, M4	1	1						
34	2	171081-55910	SCREEN	1	1						
35	2	23418-060000	GASKET, 6X1.0	2	2						
36	1	129210-59140	PIPE ASSY, FUEL		1						
37	2	124766-59050	CLIP, HOSE 12		2						
38	2	105230-59510	PIPE, FUEL		1						

N:Old ←Yes/No→ New. Q:Old ←No/Yes→ New. R:Old ←Yes/Yes→ New. S:Old ←No/No→ New. W:Add. Z:Discontinued. F:Interchangeable by set. K:Q'ty Change

Copyright (C) YANMAR GLOBAL CS CO., LTD. All RightsReserved.

Fig.14. STARTING MOTOR

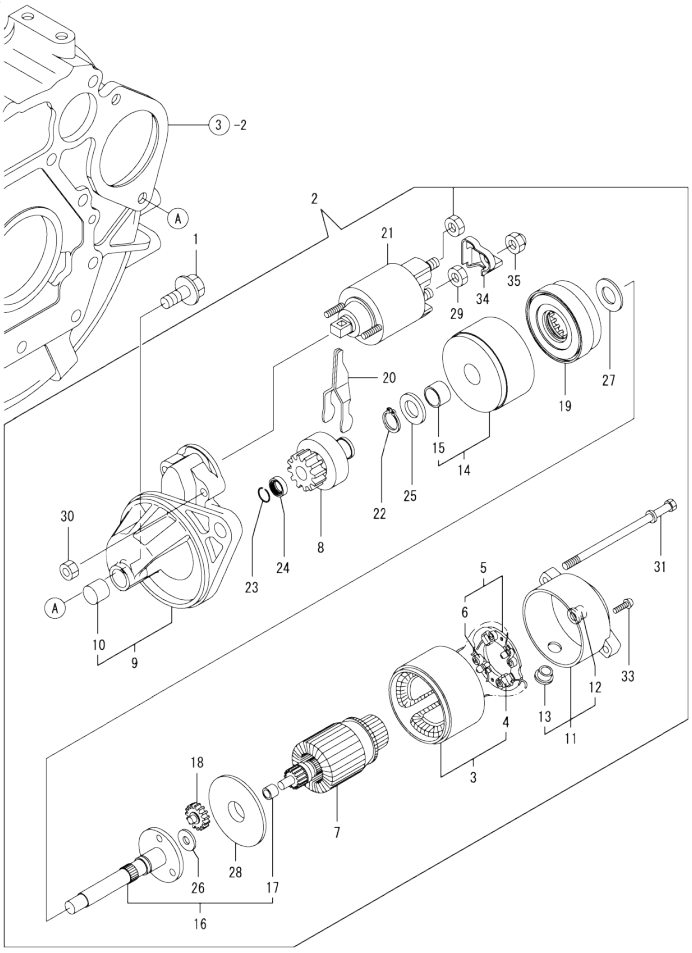

(A)=2TNV70-NBK
(B)=2TNV70-HGE
(C)=
(D)=
(E)=
(F)=

No.	Lev.	Parts No.	Description	Q'ty (A)	(B)	(C)	(D)	(E)	(F)	I	R
1	1	26106-100252	BOLT, M10X 25 PLATED	2	2						
2	1	119515-77010	STARTER, P1.1	1	1						
3	2	X0281007680	YOKE ASSY	1	1						
4	3	X0280996180	STARTER KIT	2	2						
5	2	X0285105190	HOLDER ASSY	1	1						
6	3	X0285205030	SPRING	4	4						
7	2	X0282005871	ARMATURE ASSY	1	1						
8	2	X0283006960	CLUTCH ASSY	1	1						
9	2	X4284001590	HOUSING ASSY,STARTER	1	1						
10	3	X9491050100	BEARING, NEEDLE	1	1						
11	2	X0285007030	FRAME ASSY.	1	1						
12	3	X9491040990	BEARING	1	1						
13	3	X0280626010	COVER	1	1						
14	2	X0284105040	BEARING ASSY	1	1						
15	3	X9491034330	BEARING	1	1						
16	2	X0286105010	SHAFT ASSY	1	1						
17	3	X9491034320	BEARING	1	1						
18	2	X0286305010	GEAR	3	3						
19	2	X0286355010	GEAR	1	1						
20	2	X0287405140	LEVER	1	1						
21	2	X0534007800	SWITCH ASSY	1	1						
22	2	X9055715000	RING	1	1						
23	2	X9490721360	RING	1	1						
24	2	X0280210331	NUT	1	1						
25	2	X9490138110	WASHER	1	1						
26	2	X9490138090	WASHER	1	1						
27	2	X9490138100	WASHER	1	1						
28	2	X0284525010	PLATE	1	1						
29	2	X9490562360	NUT	1	1						
30	2	X9490560750	NUT	2	2						
31	2	X9490423520	BOLT, THROUGH	2	2						
33	2	X9490065670	SCREW, M4X6	2	2						
34	2	X0280335360	COVER, TERMINAL	1	1						
35	2	X1289510130	NUT	1	1						

N:Old ◄Yes/No► New. Q:Old ◄No/Yes► New. R:Old ◄Yes/Yes► New. S:Old ◄No/No► New. W:Add. Z:Discontinued. F:Interchangeable by set. K:Q'ty Change

Copyright (C) YANMAR GLOBAL CS CO., LTD. All RightsReserved.

Fig.15. GENERATOR

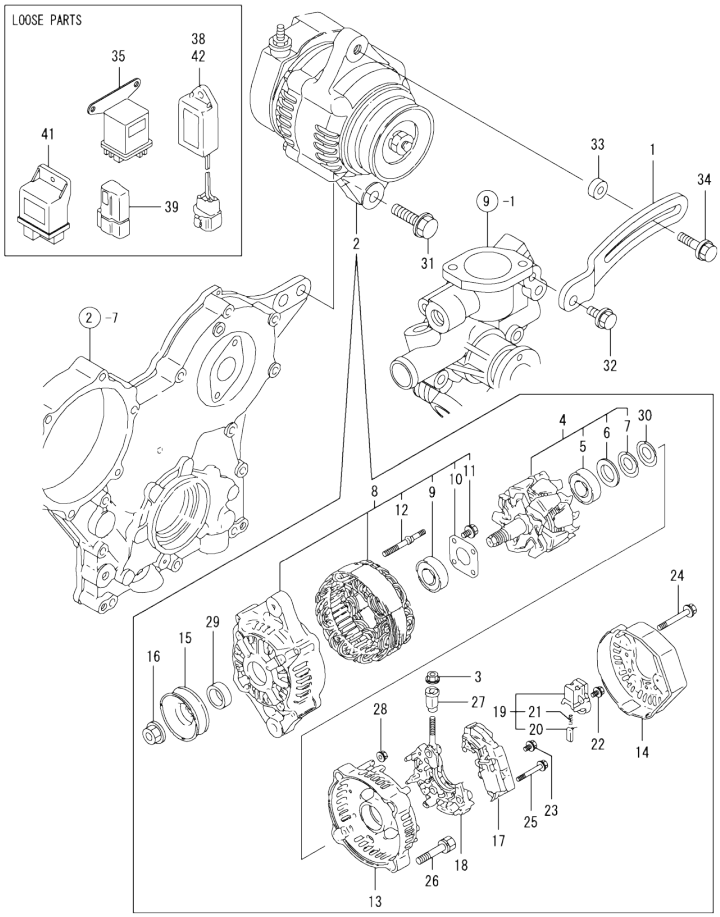

(A)=2TNV70-NBK
(B)=2TNV70-HGE
(C)=
(D)=
(E)=
(F)=

No.	Lev.	Parts No.	Description	Q'ty (A)	(B)	(C)	(D)	(E)	(F)	I	R
1	1	119717-77340	ADJUSTER	1	1						
2	1	129423-77200	GENERATOR, 12V-40A	1	1						
3	2	X9490561001	NUT	1	1						
4	2	119620-77380	ROTOR ASSY	1	1						
5	3	119620-79240	BALL BEARING	1	1						
6	3	119620-79250	COVER, BEARING	1	1						
7	3	119620-79360	WASHER, THRUST	1	1						
8	2	119620-77421	FRAME ASSY, DRIVE	1	1						
9	3	119620-79200	BALL BEARING	1	1						
10	3	119620-79210	PLATE	1	1						
11	3	119620-79220	SCREW	4	4						
12	3	119620-79230	BOLT, STUD	2	2						
13	2	119620-77440	FLAME ASSY, REAR	1	1						
14	2	129240-79300	COVER	1	1						
15	2	119620-77461	PULLEY	1	1						
16	2	119620-77471	NUT	1	1						
17	2	129423-77710	REGULATOR ASSY	1	1						
18	2	119620-79260	HOLDER	1	1						
19	2	119620-79270	HOLDER, BRUSH	1	1						
20	3	119620-77480	BRUSH ASSY	2	2						
21	3	119620-79280	SPRING	2	2						
22	2	119620-79290	SCREW	1	1						
23	2	119620-79300	SCREW	1	1						
24	2	119620-79310	BOLT	3	3						
25	2	119620-79320	SCREW W/WASHER	2	2						
26	2	119620-79330	BOLT	2	2						
27	2	119620-79340	INSULATION BUSH	1	1						
28	2	119620-79350	NUT	2	2						
29	2	119620-77490	COLLAR	1	1						
30	2	119620-79360	WASHER, THRUST	1	1						
31	1	26106-100452	BOLT, M10X 45 PLATED	1	1						
32	1	26106-080202	BOLT, M8X 20 PLATED	1	1						
33	1	119940-77270	SPACER, GENERATOR	1	1						
34	1	119802-77340	BOLT, ADJUSTER	1	1						
35	1	119650-77910	RELAY ASSY, GLOW	1	1						
38	1	129211-77920	TIMER	1	1						
39	1	119643-66900	DIODE	1	1						
41	1	119802-77200	RELAY, SAFETY	1							
42	1	129155-77925	TIMER	1							

N:Old ←Yes/No→ New. Q:Old ←No/Yes→ New. R:Old ←Yes/Yes→ New. S:Old ←No/No→ New. W:Add. Z:Discontinued. F:Interchangeable by set. K:Q'ty Change

Copyright (C) YANMAR GLOBAL CS CO., LTD. All RightsReserved.

Fig.16. GASKET SET

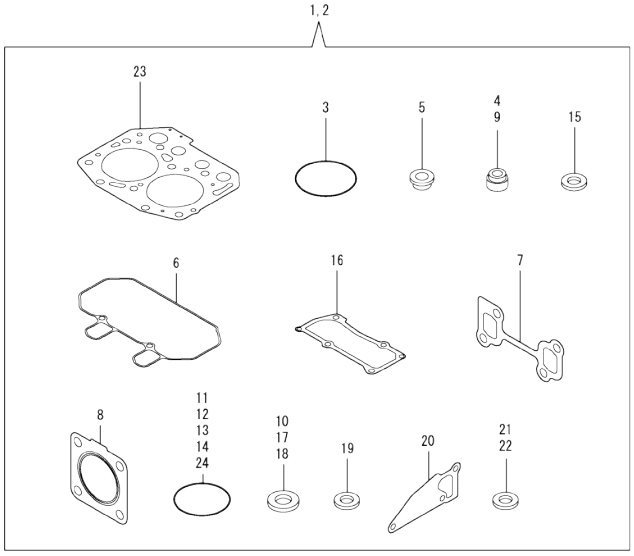

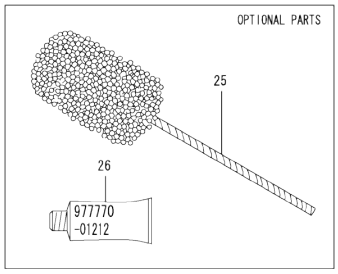

(A)=2TNV70-NBK
(B)=2TNV70-HGE
(C)=
(D)=
(E)=
(F)=

No.	Lev.	Parts No.	Description	Q'ty (A)	(B)	(C)	(D)	(E)	(F)	I	R
1	1	719415-92610	GASKET SET	1							1
2	1	719415-92620	GASKET SET		1						1
3	2	121850-51960	O-RING	1	1						
4	2	119717-11340	SEAL, VALVE STEM	2	2						
5	2	129901-11450	PROTECTOR, NOZZLE	2	2						
6	2	119415-11310	GASKET, BONNET	1	1						
7	2	119415-13110	GASKET	1	1						
8	2	119515-13200	GASKET, SILENCER	1	1						
9	2	119717-11350	SEAL, VALVE STEM	2	2						
10	2	22190-080002	WASHER, SEAL 6	4	4						
11	2	24311-000320	O-RING, 1AP32.0	2	2						
12	2	119717-32060	O-RING, P15.0	1	1						
13	2	119624-32040	O-RING, P12.0	1	1						
14	2	119717-32050	O-RING, P17.0	3	3						
15	2	119600-11460	GASKET, NOZZLE	4	4						
16	2	119415-11330	GASKET	1	1						
17	2	22190-160002	WASHER, SEAL 16	1	1						
18	2	22190-120002	WASHER, SEAL 12	4	4						
19	2	129901-59560	GASKET	2	2						
20	2	119515-42020	GASKET, WATER PUMP	1	1						
21	2	23414-080000	GASKET, 8X1.0	1	1						
22	2	124465-44950	GASKET, 16	2	2						
23	2	119415-01330	GASKET, HEAD	1	1						
24	2	24341-000240	O-RING, 1AS24.0		1						
25	1	129400-92410	FLEX HORN	1	1						1
26	1	977770-01212	GASKET, LIQUID	1	1						1

Remarks
(1) OPTIONAL PART.

N:Old ◄Yes/No► New. Q:Old ◄No/Yes► New, R:Old ◄Yes/Yes► New, S:Old ◄No/No► New. W:Add. Z:Discontinued. F:Interchangeable by set. K:Q'ty Change

Copyright (C) YANMAR GLOBAL CS CO., LTD. All RightsReserved.

Parts No. Index

Parts No.	Fig. No.	Ref. No.
101304-59020	13	13
101720-55750	13	32
102103-55520	13	5
		27
103854-39140	13	12
104200-55321	13	23
104200-55330	13	2
		24
104200-55341	13	25
104200-55750	13	9
		33
105010-11490	4	5
105025-59750	12	32
105225-59240	12	22
105230-59510	13	38
105311-01090	1	5
105312-59510	13	16
105425-01690	3	9
		17
110250-55610	13	6
		28
114250-39450	8	10
118200-53010	12	2
118400-51370	10	49
119131-18320	5	5
119225-52102	13	20
119233-77932	11	142
119285-01990	1	8
119285-11990	4	12
		29
119305-35170	8	3
119305-59120	12	4
119415-01330	1	30
	16	23
119415-01720	3	7
119415-11200	4	39
119415-11240	4	40
119415-11310	4	63
	16	6
119415-11320	4	64
119415-11330	4	65
	16	16
119415-11380	4	53
119415-11740	4	6
119415-11750	4	21
119415-13100	5	1
119415-13110	5	2
	16	7
119415-14580	6	3
119415-21580	7	8

Parts No.	Fig. No.	Ref. No.
119415-21700	7	1
119415-34801	8	1
119415-35080	8	5
119415-39210	8	11
119415-44740	9	40
119415-51030	10	6
119415-51400	10	50
119415-51500	10	65
119415-51700	10	75
119415-51710	10	76
119415-51750	10	77
119415-51760	10	78
119415-59540	12	13
119415-59810	12	9
119415-59820	12	10
119415-77820	4	73
119440-01770	3	8
119446-01770	3	16
119446-34801	8	17
119446-35080	8	18
119515-01200	1	29
119515-01601	3	2
119515-11100	4	14
		31
119515-11110	4	15
		32
119515-11280	4	44
119515-11800	4	9
		27
119515-13200	5	7
	16	8
119515-14400	6	2
119515-22080	7	14
119515-22300	7	20
119515-22500	7	16
119515-22550	7	31
119515-22900	7	29
119515-23000	7	22
119515-23600	7	37
119515-23610	7	35
119515-42001	9	29
119515-42002	9	29 -1
119515-42020	9	13
	16	20
119515-42041	9	3
		31
119515-42350	9	18
119515-51100	10	10
119515-53001	12	1
119515-53010	12	3

Parts No.	Fig. No.	Ref. No.
119515-59570	12	20
119515-61100	11	7
119515-61440	11	23
119515-77010	14	2
119540-42000	9	1
119540-59560	12	22 -1
119540-59570	12	20 -1
119600-11460	4	4
	16	15
119620-01750	3	4
119620-01800	2	9
119620-02020	1	9
119620-14200	6	1
119620-21500	7	7
119620-21941	7	13
119620-59700	12	23
119620-77380	15	4
119620-77421	15	8
119620-77440	15	13
119620-77461	15	15
119620-77471	15	16
119620-77480	15	20
119620-77490	15	29
119620-79200	15	9
119620-79210	15	10
119620-79220	15	11
119620-79230	15	12
119620-79240	15	5
119620-79250	15	6
119620-79260	15	18
119620-79270	15	19
119620-79280	15	21
119620-79290	15	22
119620-79300	15	23
119620-79310	15	24
119620-79320	15	25
119620-79330	15	26
119620-79340	15	27
119620-79350	15	28
119620-79360	15	7
		30
119621-21680	7	12
119623-01250	1	6
119624-32040	2	21
	16	13
119643-66900	15	39
119650-77910	15	35
119653-77950	11	143
119660-01911	2	20
119660-61300	11	78

Parts No.	Fig. No.	Ref. No.
119660-61901	11	69
119717-01501	2	1
119717-01521	2	7
119717-01570	2	2
119717-01590	2	3
119717-01750	2	19
119717-02410	1	12
119717-02930	1	26
119717-03031	4	54
119717-03070	4	55
		56
119717-11131	4	16
		33
119717-11190	4	18
		35
119717-11260	4	43
119717-11340	4	19
		36
	16	4
119717-11350	4	20
		37
	16	9
119717-11650	4	45
119717-13600	5	3
119717-21650	7	11
119717-23200	7	26
119717-23910	7	25
119717-25050	6	9
119717-25100	6	10
119717-25930	6	15
119717-32050	2	22
	16	14
119717-32060	8	4
	16	12
119717-32080	2	12
119717-32100	2	11
119717-32110	2	16
119717-32120	2	17
119717-42031	9	4
		32
119717-42050	9	10 -1
119717-42320	9	11
		39
119717-49800	9	24
119717-51060	10	7
119717-51070	10	8
119717-51150	6	16
119717-51180	10	15
119717-51190	10	16
119717-51200	10	17

Parts No. Index

Parts No.	Fig. No.	Ref. No.
119717-51300	10	44
119717-51330	10	47
119717-51420	10	52
119717-51480	10	91
119717-51490	10	92
119717-55650	13	18
119717-61050	11	3
119717-61060	11	4
119717-61070	11	5
119717-61100	11	6
119717-61120	11	10
119717-61130	11	11
119717-61140	11	12
119717-61150	11	13
119717-61200	11	74
119717-61400	11	16
119717-61500	11	32
119717-77340	15	1
119717-77800	4	72
119718-61700	11	128
119740-61560	11	92
119744-01521	2	8
119744-01590	2	4
119761-61560	11	93
119802-03100	4	57
119802-03110	4	58
119802-03121	4	59
119802-03131	4	60
119802-03141	4	61
119802-13620	5	4
119802-32130	2	18
119802-77200	15	41
119802-77340	15	34
119810-02940	1	31
119810-55340	13	3
119810-55650	13	8
119813-59950	12	24
119833-55620	13	1
119840-59570	12	12
119940-77270	15	33
119C10-42000	9	1 -1
119C10-42001	9	1 -2
119C10-42320	9	11 -1
		39 -1
121023-01550	2	33
121120-01620	3	3
121250-44901	9	27
121250-55620	13	7
121254-55510	13	4
121257-55720	13	29

Parts No.	Fig. No.	Ref. No.
121257-55731	13	30
121267-44760	9	21
121450-42450	9	26
121520-34810	8	16
121850-51960	2	23
	16	3
122710-51090	10	9
124060-01050	1	4
124064-55510	13	26
124066-59100	12	21
124085-02220	3	5
124160-01751	2	31
	4	52
124160-01910	1	7
124450-44740	9	20
124465-44950	9	28
	16	22
124550-51350	10	48
124766-59050	12	31
	13	15
		37
124950-21600	7	10
129001-32320	2	14
129001-32330	2	15
129005-59830	8	12
129052-61390	11	15
129100-01580	3	1
	7	2
129100-35140	8	2
129100-51560	10	70
129100-51570	10	71
129100-52000	10	98
129100-52101	10	100
129100-52200	10	97
129100-61650	11	62
129100-61730	11	129
129150-11230	4	46
129150-11750	4	48
129150-25301	6	14
129150-59131	12	7
129155-51020	10	5
129155-51140	10	13
129155-51280	10	42
		43
	11	8
129155-51450	10	60
129155-51521	10	66
129155-51530	10	67
129155-51540	10	68
129155-51550	10	69

Parts No.	Fig. No.	Ref. No.
129155-51580	10	73
129155-51591	10	74
129155-51600	10	21
129155-52051	10	96
		99
129155-61341	11	79
129155-61450	11	24
129155-61460	11	80
129155-61480	11	26
129155-77925	15	42
129156-51910	10	80
129156-61460	11	25
129209-61370	11	14
129209-61930	11	140
129209-61970	11	141
129210-59050	13	14
129210-59130	12	30
129210-59140	13	36
129211-77920	15	38
129240-79300	15	14
129335-55700	13	21
129350-49530	9	23
129400-92410	16	25
129423-77200	15	2
129423-77710	15	17
129486-61540	11	52
129486-61650	11	63
129508-11180	4	17
		34
129900-07900	4	1
129900-32130	2	13
129901-11450	4	3
	16	5
129901-59560	12	19
	16	19
129916-49740	9	12
158552-61700	11	64
158552-61710	11	68
158552-61900	11	85 -1
158600-51170	10	14
158600-51270	10	41
158600-51410	10	51
158600-51420	10	53
158600-51441	10	54
158600-51570	10	72
158600-51790	10	79
158601-61700	11	131
158601-61710	11	130
171001-42290	9	19
171056-49120	9	17

Parts No.	Fig. No.	Ref. No.
171081-55910	13	34
174307-51700	11	33
22190-080002	8	13
		15
	16	10
22190-100002	11	81
22190-120002	11	82
	12	11
	13	17
	16	18
22190-160002	3	12
		19
	10	81
	16	17
22217-060000	10	82
22217-120000	6	17
22242-000120	4	49
22252-000220	7	21
22272-000030	11	70
22351-050010	10	83
22351-060012	4	38
22372-040000	11	83
22512-040120	7	4
22857-500100	4	66
		67
22857-500160	4	68
23414-080000	9	14
	16	21
23414-120016	11	144
23418-060000	13	35
23857-030000	8	14
23876-005000	4	13
		30
23876-030000	2	10
23887-100002	11	84
24101-060034	10	84
24101-063034	10	85
24311-000320	2	32
	4	69
	16	11
24311-240100	13	10
		22
24316-000150	10	86
24341-000070	11	71
24341-000240	2	34
	16	24
24341-000280	11	85
26014-080702	13	11
26022-050122	10	87
26022-060162	10	88

Parts No. Index

Parts No.	Fig. No.	Ref. No.
26106-050102	10	89
26106-060102	8	9
	11	72
		86
26106-060122	2	24
	3	13
	6	8
26106-060142	11	87
26106-060162	2	25
		35
26106-060202	4	70
	11	88
26106-060252	3	14
26106-060302	9	22
26106-060352	6	13
26106-060402	2	26
		27
26106-060452	3	15
	11	89
26106-060602	2	28
26106-060652	2	29
26106-060752	4	71
26106-080122	9	15
26106-080142	13	19
26106-080162	4	2
26106-080202	9	25
	15	32
26106-080402	4	51
26106-080502	9	16
26106-100252	14	1
26106-100452	15	31
26206-100252	3	6
26306-080002	2	30
	5	6
26366-080002	11	73
26577-060122	9	9
		37
26716-060002	10	90
26716-120002	6	18
26736-120002	11	90
26756-060002	11	91
26979-050162	4	50
27241-120000	1	13
27241-250000	9	10
		38
719415-01560	1	1
719415-92610	16	1
719415-92620	16	2
719440-51350	10	1
719446-51350	10	2

Parts No.	Fig. No.	Ref. No.
719717-01500	2	5
719717-02900	1	14
719717-02910	1	34
719744-01500	2	6
977770-01212	2	36
	3	20
	4	74
	16	26
X0280210331	14	24
X0280335360	14	34
X0280626010	14	13
X0280996180	14	4
X0281007680	14	3
X0282005871	14	7
X0283006960	14	8
X0284105040	14	14
X0284525010	14	28
X0285007030	14	11
X0285105190	14	5
X0285205030	14	6
X0286105010	14	16
X0286305010	14	18
X0286355010	14	19
X0287405140	14	20
X0534007800	14	21
X1289510130	14	35
X4284001590	14	9
X9055715000	14	22
X9490065670	14	33
X9490138090	14	26
X9490138100	14	27
X9490138110	14	25
X9490423520	14	31
X9490560750	14	30
X9490561001	15	3
X9490562360	14	29
X9490721360	14	23
X9491034320	14	17
X9491034330	14	15
X9491040990	14	12
X9491050100	14	10

Parts No.	Fig. No.	Ref. No.

Parts No.	Fig. No.	Ref. No.